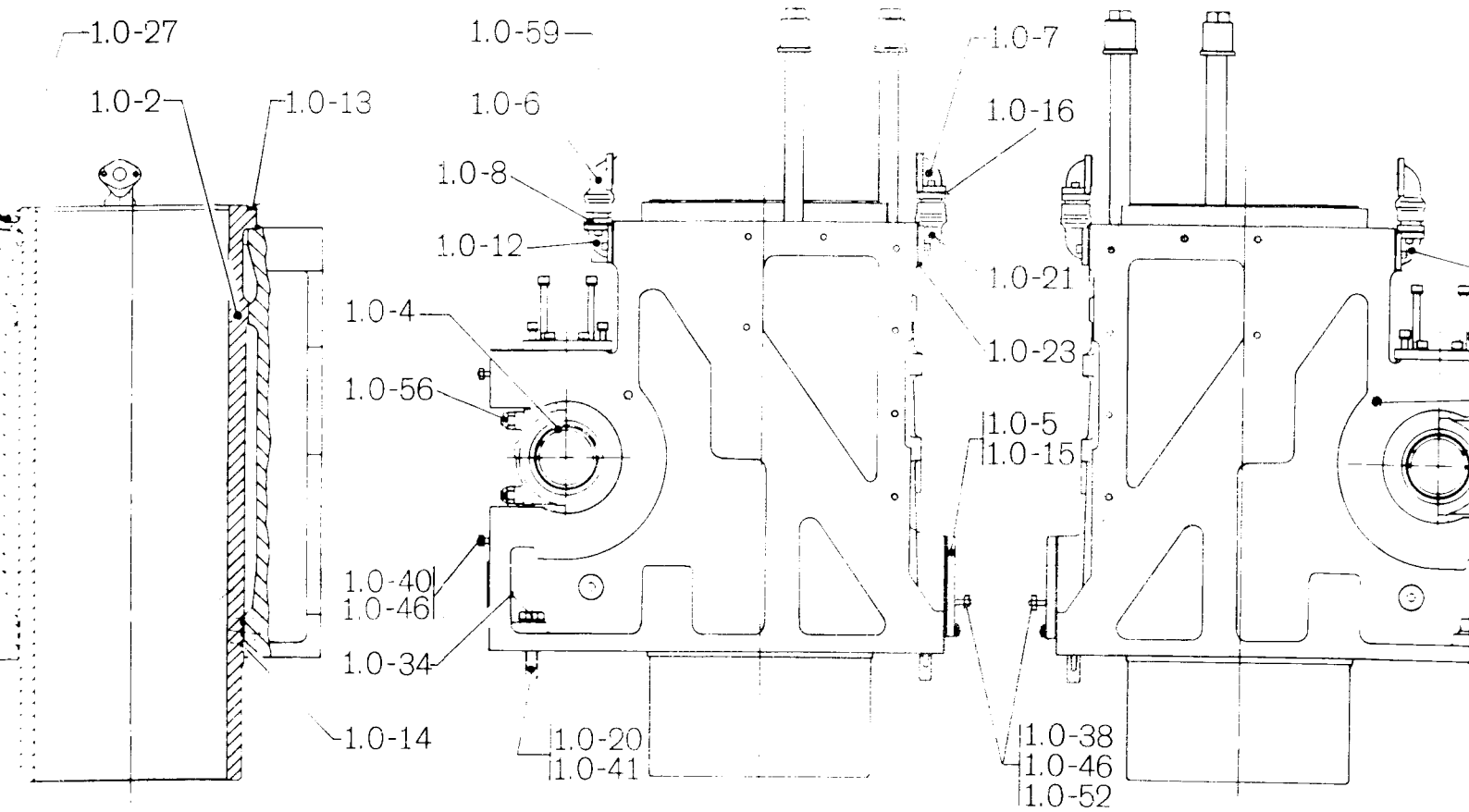
1.0-27
1.0-2
1.0-13
1.0-59
1.0-6
1.0-8
1.0-12
1.0-4
1.0-56
1.0-40
1.0-46
1.0-34
1.0-14
1.0-20
1.0-41
1.0-7
1.0-16
1.0-21
1.0-23
1.0-5
1.0-15
1.0-38
1.0-46
1.0-52

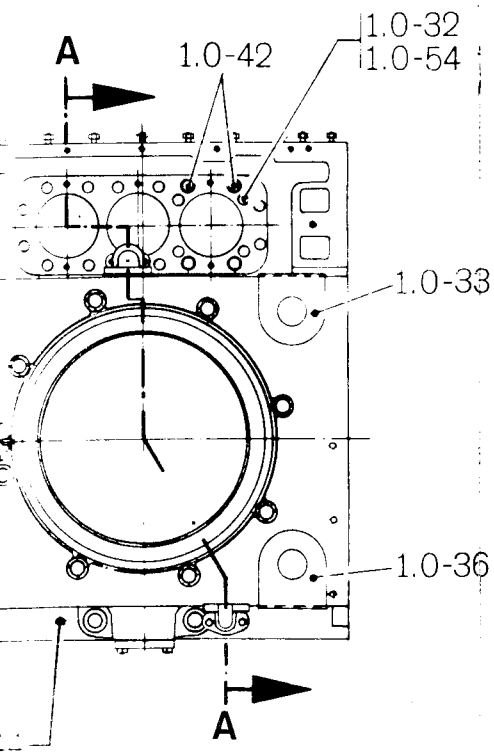
A
1.0-42
1.0-32
1.0-54
1.0-33
1.0-36
A

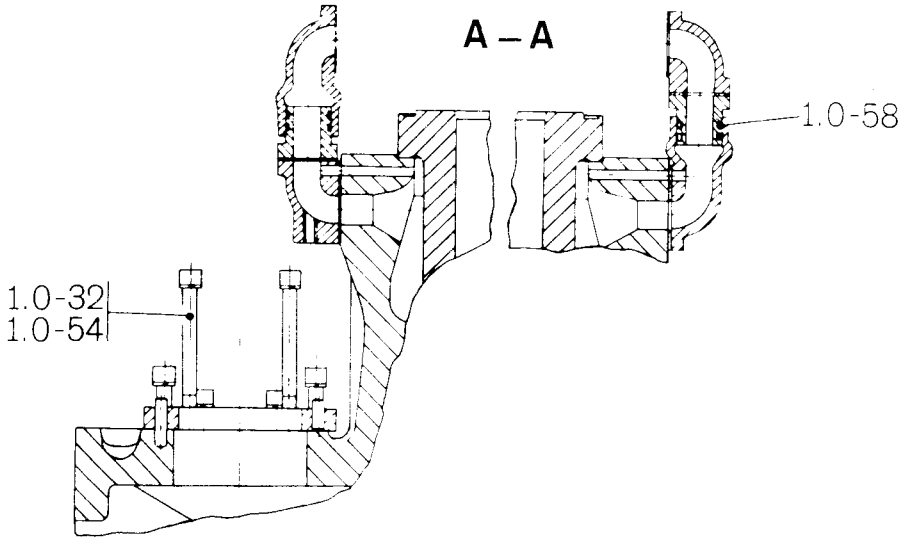
A – A
1.0-58
1.0-32
1.0-54